Journal of Pharmaceutical and Biomedical Analysis 54 (2011) 359–367

Contents lists available at ScienceDirect

Journal of Pharmaceutical and Biomedical Analysis

journal homepage: www.elsevier.com/locate/jpba

Automated system for on-line desorption of dried blood spots applied to LC/MS/MS pharmacokinetic study of flurbiprofen and its metabolite

Julien Déglon[a,c], Aurélien Thomas[a,c], Youssef Daali[b,c], Estelle Lauer[a], Caroline Samer[b,c], Jules Desmeules[b,c], Pierre Dayer[b,c], Patrice Mangin[a], Christian Staub[a,c,*]

[a] Unit of Toxicology, University Center of Legal Medicine, Geneva, Switzerland
[b] Division of Clinical Pharmacology and Toxicology, Geneva University Hospitals, Geneva, Switzerland
[c] Swiss Centre for Applied Human Toxicology, University of Geneva, Geneva, Switzerland

ARTICLE INFO

Article history:
Received 1 July 2010
Received in revised form 11 August 2010
Accepted 17 August 2010

Keywords:
On-line DBS
Automated system
LC/MS/MS
Flurbiprofen
Pharmacokinetic

ABSTRACT

This paper illustrates the development of an automated system for the on-line bioanalysis of dried blood spots (on-line DBS). In this way, a prototype was designed for integration into a conventional LC/MS/MS, allowing the successive extraction of 30 DBS toward the analytical system without any sample pretreatment.

The developed method was assessed for the DBS analysis of flurbiprofen (FLB) and its metabolite 4-hydroxyflurbiprofen (OH-FLB) in human whole blood (i.e. 5 μL). The automated procedure was fully validated based on international criteria and showed good precision, trueness, and linearity over the expected concentration range (from 10 to 1000 ng/mL and 100 to 10,000 ng/mL for OH-FLB and FLB respectively). Furthermore, the prototype showed good results in terms of recovery and carry-over. Stability of both analytes on filter paper was also investigated and the results suggested that DBS could be stored at ambient temperature for over 1 month.

The on-line DBS automated system was then successfully applied to a pharmacokinetic study performed on healthy male volunteers after oral administration of a single 50-mg dose of FLB. Additionally, a comparison between finger capillary DBS and classic venous plasma concentrations was investigated. A good correlation was observed, demonstrating the complementarity of both sampling forms.

The automated system described in this article represents an efficient tool for the LC/MS/MS analysis of DBS samples in many bioanalytical applications.

© 2010 Elsevier B.V. All rights reserved.

1. Introduction

Over the past decade, dried blood spot (DBS) analysis has enjoyed growing popularity as an alternative sampling procedure in the bioanalytical, clinical and pharmaceutical community. Indeed, DBS offers numerous advantages over conventional whole blood, plasma, or serum sample collection. Furthermore, the procedure is clearly less invasive and cost effective in terms of sample collection, shipment and storage [1–4]. Due to its easiness, the DBS collection can be performed after a small finger prick in a non-hospital environment with minimal training by technicians or even by patients themselves [5,6]. Furthermore, the DBS sample process does not require the use of anticoagulant or plasma separation and ensures better stability of the compounds during shipment and storage without refrigeration [7–10]. Lastly, the DBS process reduces the risk of infection by pathogens such as HIV or hepatitis, to a minimum [11,12].

Since its introduction for phenylketonurea screening in newborns, DBS sampling form has been successfully applied to multiple neonatal metabolic disorder screening programs [13], and more recently to the monitoring of therapeutic agents [14–19], pharmacokinetic [20], and toxicokinetic studies [21]. These combined advantages make the DBS procedure a patient-friendly tool for blood collection, especially in problematic and vulnerable patient populations [22–24]. The ease of the process can also help in the recruitment of subjects (human and animal) for preclinical and clinical studies [25–27].

In many biomedical applications, LC/MS/MS is considered as the gold standard for the quantification of pharmaceutical compounds in biological samples, especially with the use of a triple stage quadrupole (QqQ) operating in MRM mode [28,29]. Furthermore, recent advancements in MS technology have allowed for great improvements in terms of selectivity and sensitivity, which have promoted new opportunities in DBS analysis since concentra-

* Corresponding author at: Unit of Toxicology, University Center of Legal Medicine, 1 rue Michel-Servet, 1211 Geneva 4, Switzerland.
E-mail address: Christian.staub@hcuge.ch (C. Staub).

0731-7085/$ – see front matter © 2010 Elsevier B.V. All rights reserved.
doi:10.1016/j.jpba.2010.08.032

tions under 1 ng/mL can be reached from only few a microliters of biofluid [30].

Generally, an off-line extraction is performed before analysis using a mixture of aqueous and organic solvents to extract compounds from the filter paper. In order to increase the analytical throughput, different processes have been published permitting the direct analysis of DBS specimens [31–34]. Among these approaches, we have published a new concept, called on-line desorption of dried blood spots (on-line DBS), allowing the on-line extraction of a DBS previously integrated into a conventional LC/MS system [35]. Although the advantages of the DBS sampling were coupled with a no sample pretreatment procedure, one weakness of the on-line DBS process was semi-automation. This weakness arose because only 6 DBS specimens could be analyzed successively. To be more compliant with high-throughput requirements, a homemade prototype was designed and developed to ensure the automation of the on-line DBS process.

Among the different applications, pharmacokinetic studies represent an interesting approach for the evaluation of the on-line DBS automated system because multiple samples have to be collected over a short period. In the present work, a pharmacokinetic study of flurbiprofen (FLB) and its metabolite 4-hydroxyflurbiprofen (OH-FLB) was performed on human volunteers to assess the activity of cytochrome P450 2C9 (CYP2C9). This enzyme is responsible for phase I (oxidative) metabolism of widely prescribed xenobiotics, such as nonsteroidal anti-inflammatory (NSAI) or anticoagulant drugs, and represents an important inter-individual variability which can lead to severe side effects when such drugs are administered [36–38]. The use of FLB, an NSAI drug, is commonly used for the phenotyping of CYP2C9 by determining the ratio between the phase I metabolite and the parent drug [37,39,40].

In this paper, we report the use of an automated system for the on-line DBS analysis applied to the pharmacokinetic study of FLB and OH-FLB in human whole blood.

2. Experimental

2.1. Chemicals and reagents

FLB and naproxen (NAX) were purchased from Sigma–Aldrich (Steinheim, Germany). OH-FLB was gift of Prof T.S. Tracy (School of Pharmacy, West Virginia University, Morgantown). Stock solutions were prepared at 1000 μg/mL in methanol. Working standard solutions were prepared by dilution in methanol of stock solutions to reach concentrations of interest ranging from 200 to 50,000 ng/mL, except for NAX, used as internal standard (IS), which was prepared by dilution in methanol to reach a concentration of 1000 ng/mL. After use, stock and working solutions were stored at −20 °C.

Both acetonitrile (ACN) and methanol (MeOH) were of the high-performance chromatographic grade from Merck (Darmstadt, Germany). Fresh human blood was supplied by the Geneva University Hospitals (Geneva, Switzerland) with EDTA as anticoagulant.

2.2. DBS sample processing

2.2.1. Preparation of calibration standards and quality control samples

Calibration standards (Cal) were prepared 1 day before analysis. After evaporation of appropriate working standard solutions previously added into Eppendorf tubes, fresh EDTA–whole blood was added to reach a calibration range of 100–10,000 ng/mL for FLB and 10–2000 ng/mL for OH-FLB.

Quality controls (QC) were simultaneously and independently prepared in the same way in our laboratory. Four QC samples at concentrations of 100, 500, 2000, and 10,000 ng/mL for FLB and 10, 50, 200, and 2000 ng/mL for OH-FLB were prepared 1 day before analysis, similarly to the calibration standards.

2.2.2. Blood spotting

Five microliters of real or spiked whole blood were spotted on a filter paper card, item no. 105355097 from Whatman (Dassel, Germany), using a volumetric micropipette (Eppendorf, Hamburg, Germany). The blood spots were allowed to dry at room temperature for 2 h and then packed in a sealable plastic bag containing desiccant until analysis. They were stored in the dark at ambient temperature except for short-term stability experiments, in which a variety of temperatures were tested.

2.2.3. DBS loading

Before analysis, a disc (i.d. 10 mm) containing the whole DBS was manually punched out and directly introduced into the desired position of the DBS prototype (described in Section 2.3.1). Then, 5 μL of internal standard was added to the disc using the same volumetric micropipette used above.

2.3. Equipment

On-line DBS analyses were performed using a homemade prototype coupled to a LC/MS/MS system consisting of a 5500 QTrap® triple quadrupole linear ion trap (QqQ_{LIT}) mass spectrometer equipped with a TurboIon Spray™ interface (AB Sciex, Concord, ON, Canada) and an Agilent series 1100 (Waldbronn, Germany) as LC system. Data were acquired and processed using Analyst software (version 1.5.1; AB Sciex, Toronto, Canada).

2.3.1. On-line DBS automated system and chromatographic conditions

In contrast to previous reports [25,35], the on-line extraction of DBS was henceforth carried out in an automated way. For this, a prototype was developed in our laboratory allowing the successive analyses of 30 DBS samples.

The developed prototype consisted of two main components, shown in Fig. 1. The first component was an inox plate set on a stand with an electrical engine inside allowing the complete rotation of the plate around *y*-axis. The upper surface of the plate was machined to form 30 wells, each of which could receive a 10-mm filter paper disc.

The second component was an articulate inox clamp characterized by a movement toward the plate along *z*-axis. The body of the clamp contained two pistons that ensured the lock on the desired position when the clamp was above the plate. The sealing between the pistons and the plate was guaranteed by a flexible viton ring. Each piston was machined to be fit with conventional HPLC tubing. The movement of the clamp and the closing of the pistons were activated by pressurized air (6 bars).

Finally, a numerical command panel permitted either manual control of the prototype or running by a programmed sequence synchronized with the LC/MS/MS system.

The DBS prototype was connected or disconnected to the chromatographic system by way of a 6-port valve (see Fig. 2). When the clamp was locked on the desired position, a start signal was sent by the prototype to the LC/MS/MS device using a remote cable. At this moment, valve 1 was switched in position 1 and the on-line desorption of the DBS sample was started by pump 1 using 100% MeOH at a flow rate of 0.1 mL/min. At 2.65 min, the quaternary pump (pump 2) was started using 100% H_2O at a flow rate of 0.9 mL/min to adjust the chemical proprieties of the desorption mobile phase by the use of a tee connector. Thus, the global mobile phase H_2O–MeOH (90:10, v/v) at 1.0 mL/min permitted the focalization of the analytes of interest ahead of the analytical column (Chromolith Flash RP-18e, 25 mm × 4.6 mm).

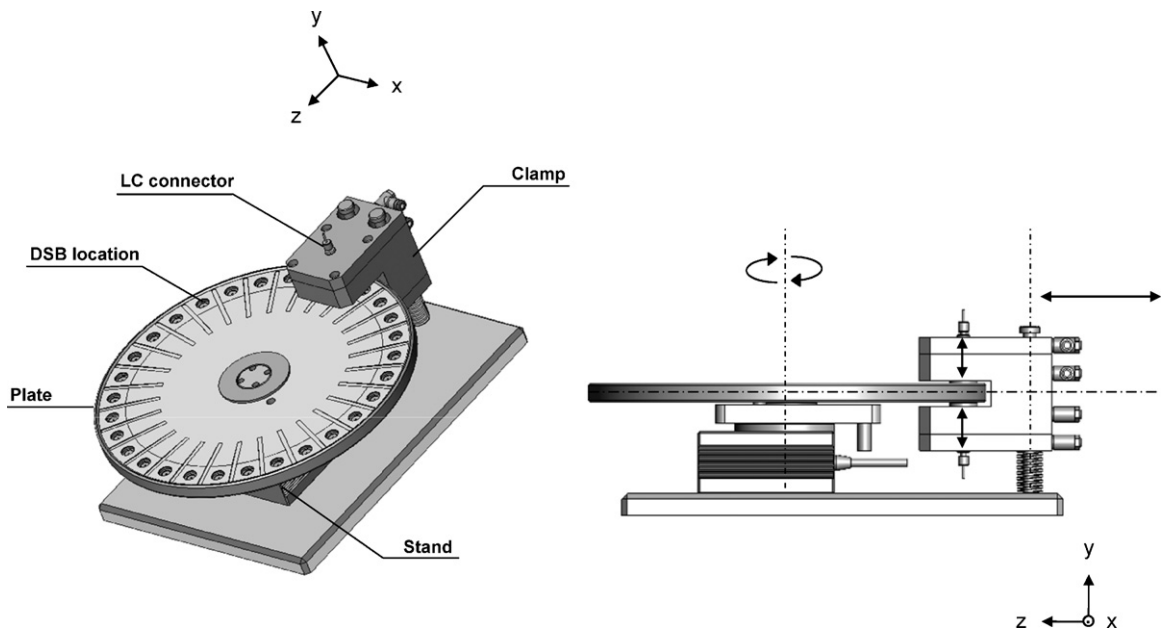

Fig. 1. Schemas of the on-line DBS prototype. Black arrows illustrate the movements of the different components of the prototype.

After the desorption step (t = 5.0 min), valve 1 was then returned to its initial position (0) disconnecting the prototype from the analytical column. After a washing period of 1.0 min (100% H_2O at 0.8 mL/min), a generic gradient from H_2O–ACN (100:0, v/v) to H_2O–ACN (5:95, v/v) over 4 min was delivered by pump 2 at a flow rate of 0.8 mL/min, allowing the separation of the analytes prior to their detection. The method featured a 16-min total run time per analysis, including desorption step and column re-equilibration. To avoid carry-over, a cleaning of the clamp, locked in the retracted position, was carried out by applying a MeOH flow rate at 0.5 mL/min over 5 min at the same time as the analysis step (see Fig. 2(C)).

The on-line DBS automated system was then evaluated through the validation of the FLB and OH-FLB quantification method described in Sections 2.4 and 2.5.

2.3.2. Mass spectrometric detection

The TurboIon Spray interface was operated in the negative ionization mode. Nitrogen was used as curtain and nebulizer gas and the source parameters were set to a temperature of 650 °C, a capillary voltage of −3500 V, an entrance potential of −10 V, a curtain gas pressure of 20 psi, a nebulizer gas (GS1) pressure of 30 psi, and an auxiliary gas (GS2) pressure of 40 psi.

The multiple reaction monitoring (MRM) experiments were based on collision-induced dissociation (CID) occurring in the collision cell (quadrupole 2). For each compound, two MRM transitions were used for quantification and identification, respectively, and selected on the criteria of abundance and selectivity. All the MRM parameters are listed in Table 1.

2.4. Validation process

A full validation procedure in human DBS was conducted according to the guidelines of the "Société Française des Sciences et des Techniques Pharmaceutiques" (SFSTP) [41].

For each of 3 non-consecutive days, DBS Cal were prepared in duplicate (n = 2) at five concentration levels (k = 5; Cal = 10, 25, 100, 500, and 1000 ng/mL for OH-FLB, and Cal = 100, 250, 1000, 5000, and 10,000 ng/mL for FLB) for determining the function response. Furthermore, DBS QC were prepared independently in the same way in quadruplicate (n = 4) at four concentration levels (k = 4; QC = 10, 50, 200, and 1000 ng/mL for OH-FLB, and QC = 100, 500, 2000, and 10,000 ng/mL for FLB), representing the entire range of concentrations tested. The validation process allowed the determination of specific criteria such as trueness, precision, linearity, limit of quantification (LOQ), and limit of detection (LOD), which will be discussed later.

2.5. Carry-over, recovery and matrix effect

Carry-over was investigated by analysis of seven DBS (containing OH-FLB and FLB at 1000 and 10,000 ng/mL, respectively) in order followed by two blank filter papers.

The overall analyte recovery was calculated at two concentration levels (lowest and highest QCs) measured in triplicate by comparing the absolute analyte peak area of real DBS samples to those obtained from compounds directly injected in the mobile phase.

In the same way, evaluation of matrix effect was carried out by comparing the absolute analyte peak area of DBS to corresponding

Table 1
MS/MS parameters for flurbiprofen (FLB), 4-hydroxyflurbiprofen (OH-FLB), and naproxen (NAX). Quantitative transitions are underlined.

Compounds	$[M-H]^-$ (m/z)	Q1 → Q3 (m/z)	CE (V)	DP (V)	CXP (V)	Dwell time (ms)
FLB 1	243.2	<u>243 → 199</u>	−18	−50	−15	200
FLB 2	243.2	243 → 101	−70	−50	−15	200
OH-FLB 1	259.2	<u>259 → 215</u>	−12	−25	−20	200
OH-FLB 2	259.2	259 → 213	−50	−25	−13	200
NAX	229.2	229 → 169	−40	−105	−13	200

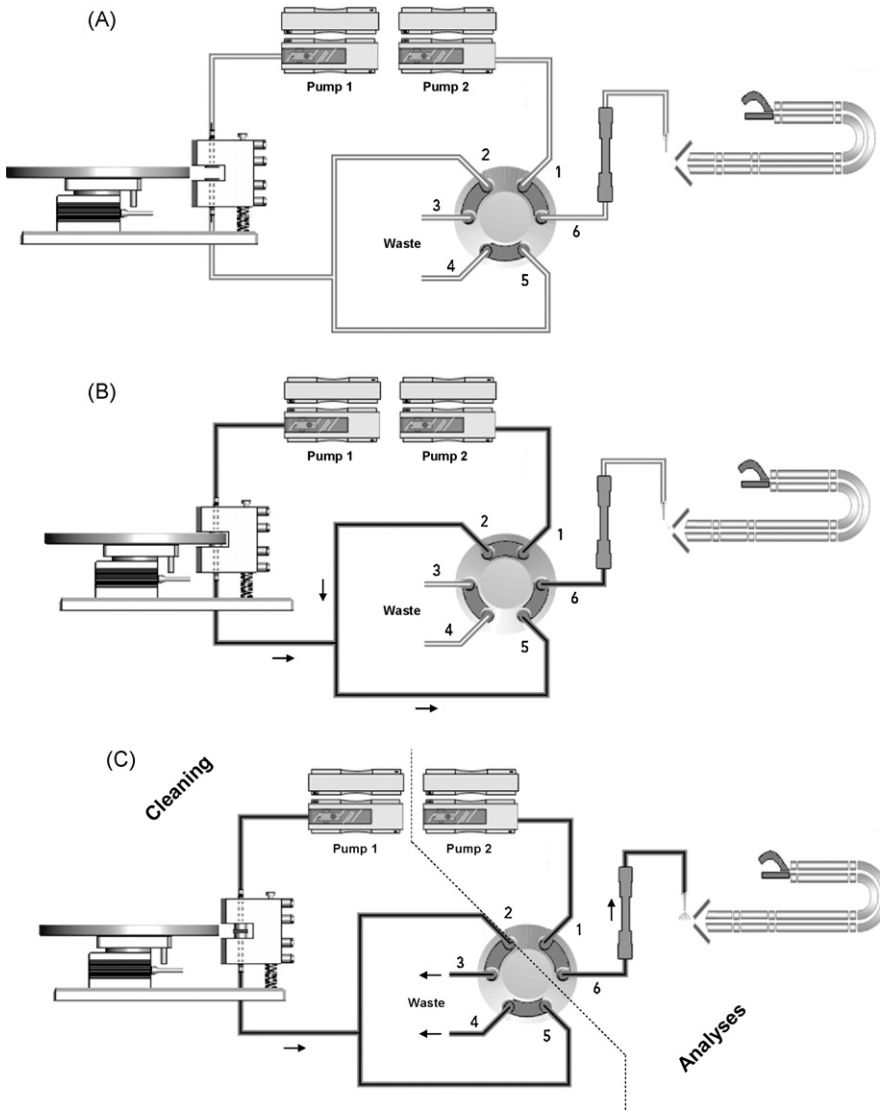

Fig. 2. Individual steps of the on-line DBS automated system coupled to the LC/MS/MS highlighting the initial position (A), the on-line desorption of DBS and the trapping of interesting compounds ahead of the column (B), and the separation combined with the detection of the analytes (C). A cleaning of the prototype was carried out during this last step.

standard methanolic solutions previously spotted on filter paper (dried methanol spot, DMS). This experiment was performed at two concentration levels (equal to the recovery) in triplicate. Moreover, matrix effect investigation was also performed by post-column infusion consisting of the analysis of blank DBS specimens placed in the prototype while the compounds were infused in the mobile phase after the analytical column [25,35].

2.6. Stability of DBS

To test the short-term stability of the analytes on filter paper, DBS containing OH-FLB and FLB at two concentration levels (lowest and highest QCs) were prepared from fresh whole blood as described in the DBS sample processing section and stored at different temperatures (i.e. −20 °C, +4 °C, +40 °C, and ambient temperature). Stability assay was carried out over 1 month by comparing concentrations obtained from 30-day-old DBS with those obtained from 1-day-old DBS specimens. Each measurement was performed in triplicate.

2.7. Pharmacokinetic study

To correlate both capillary whole blood and venous plasma concentrations, a pharmacokinetic study was carried out on healthy male volunteers ($n = 10$) after oral administration of a single 50-mg dose of FLB (one tablet of 50 mg, Froben, Abbott AG, Baar, Switzerland). FLB and its metabolite OH-FLB were then monitored over 8 h. For each sampling time, capillary whole blood (i.e. 5 μL) was collected on filter paper after a small finger prick (BD Microtainer, Contact-Activated Lancet, Plymouth, United Kingdom), whereas venous blood was simultaneously collected into EDTA tubes (BD Vacutainer, Plymouth, United Kingdom). Plasma was obtained directly after centrifugation at 2500 rpm for 10 min and stored at −22 °C, whereas capillary DBS were stored at ambient temperature. DBS samples were analyzed (single determination) using the automated system described in this article, whereas plasma samples were quantified using LC separation with fluorescence detection as previously described [42].

This study was conducted according to the revised Declaration of Helsinki, the standards of Good Clinical Practice, and the

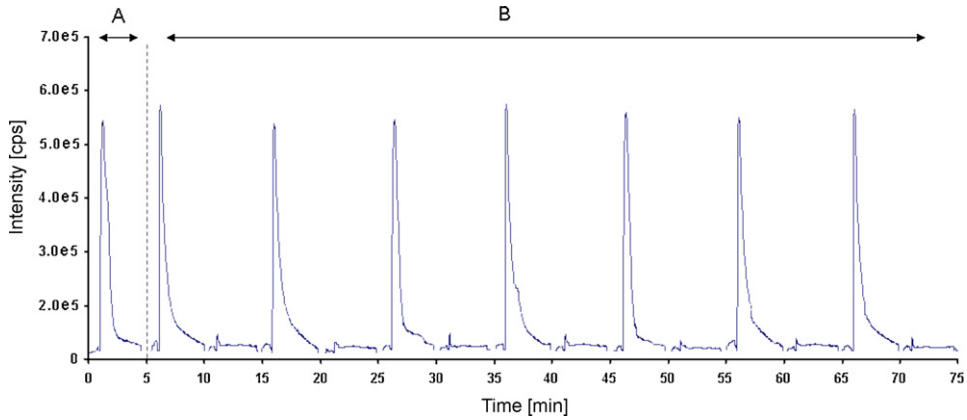

Fig. 3. Direct extraction profile of DBS containing flurbiprofen at 10,000 ng/mL using the manual desorption cell (A), and the on-line DBS automated system with blank filter paper analyzed between each DBS desorption (B). Desorption was carried out with a MeOH flow rate at 0.1 mL/min.

Swiss regulatory requirements. The protocol was approved by the Ethics Committee of our institution (ID: 09-157), and the trial was registered prior to patient enrolment at ClinicalTrials.gov (ID: NCT01026714). Written informed consent was obtained from each subject prior to inclusion.

3. Results and discussion

3.1. Evaluation of the on-line DBS automated system

3.1.1. Comparison between a desorption cell and the automated system

The on-line DBS concept was previously introduced in order to directly integrate a filter paper into a LC/MS system [35]. For this, a desorption cell was developed to accommodate a filter paper. By permitting the direct extraction of spotted analytes toward the analytical system, the procedure coupled the well-known advantages of the filter paper for bioanalysis (storage, shipment, less invasive) with a no sample pretreatment procedure. A limitation of this previous procedure was that multiple analyses required the manual inversion of the different cells. The described on-line DBS automated system was designed and developed to avoid this limitation.

The present prototype constituted of 30 wells where the DBS could be set. An automatic clamp ensured the selection of a position and the desorption of the analytes in a sequential way (see Section 2.3.1). Overall, the prototype could be represented as the combination of 30 desorption cells integrated in an automatic process.

Previous tests of the automated system were focused on ensuring that the properties of desorption demonstrated by the desorption cell [35] were also relevant for the present prototype despite the geometry of the 30 wells being developed as close as possible to the desorption cell.

Optimization and validation of the overall analytical method were carried out using FLB and its metabolite OH-FLB. Parameters of the on-line DBS prototype, such as the choice of the organic solvent, desorption flow rate and desorption time, were found to be identical to those obtained for the desorption cell. Finally, a desorption with a MeOH flow rate at 0.1 mL/min over 5 min offered the best compromise for the present application in terms of extraction efficiency, sensitivity, and analysis speed. As demonstrated in Fig. 3, the extraction profile was shown to be identical between the two processes.

In contrast to the desorption cell, importance was placed on evaluating some properties inherent to an automatic procedure. For this, a validation was carried out on the two selected probes to evaluate parameter such as carry-over, recovery, accuracy and precision of the developed method, and will be discussed in the following section. All these parameters were investigated because they were clearly influenced by the viability and repeatability of the present prototype.

3.1.2. Validation data

Bioanalytical validation was carried out on FLB and its metabolite OH-FLB using the on-line DBS automated system coupled to LC/MS/MS. Beyond the validation of the two probes for the pharmacokinetic application, the tested parameters (see Table 2) also allowed for the confirmation of the prototype viability.

To select the most suitable response function, several regression models were tested. It was determined by calculating the existing relationship between the analytical response and the expected concentration, and by applying different weighting factors [43]. For both FLB and OH-FLB, the best results were obtained for weighted linear regression with a weight factor of $1/x$. The linearity was calculated by fitting the back-calculated concentrations of the QCs as a function of the introduced concentrations and by applying the linear regression model based on the least squares method [44]. The assay was found to be linear for each analyte over the tested concentration ranges since coefficients of determination (r^2) were above 0.9998 and slope values were between 1.005 and 1.072 (data not shown).

Table 2
Validation data.

Compounds	Nominal conc. (ng/mL)	Found conc. (ng/mL)	Relative bias (%)	Repeatability (R.S.D.%)	Intermediate precision (R.S.D.%)
FLB	100	98.8	−1.2	5.2	8.2
	500	475	−5.1	8.3	9.3
	2000	2040	+2.0	3.8	3.8
	10,000	10,670	+6.7	10.0	10.0
OH-FLB	10	10.2	+2.0	6.8	6.8
	50	48.2	−3.6	6.9	7.4
	200	202	+0.8	3.4	7.9
	1000	1005	+0.5	11.7	11.7

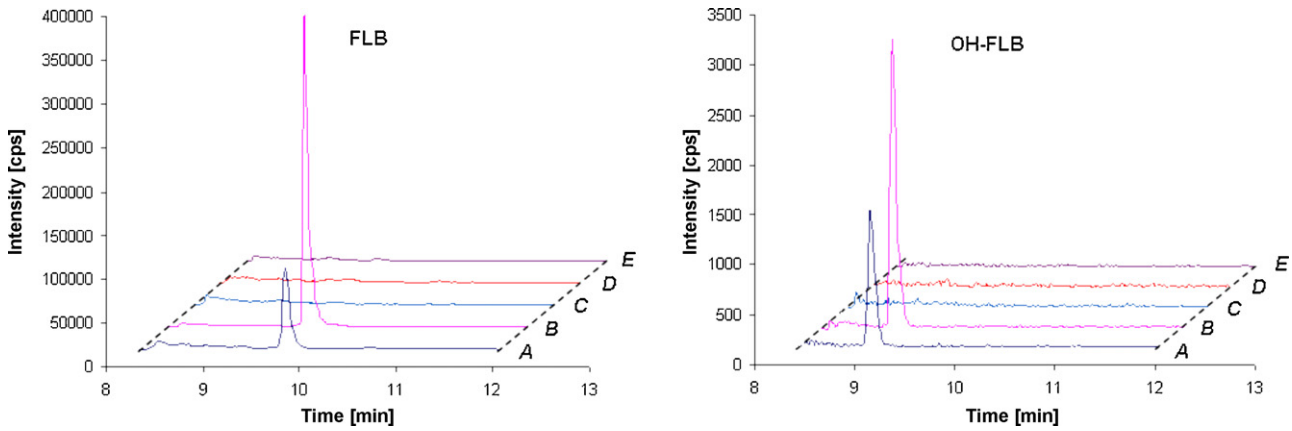

Fig. 4. LC/MS/MS extracted ion chromatograms of flurbiprofen (FLB) and 4-hydroxyflurbiprofen (OH-FLB) with QC DBS at LOQ (10 and 100 ng/mL for OH-FLB and FLB, respectively) (A), real capillary DBS collected after 8 h from healthy male volunteer after oral administration of FLB (B), and real blank capillary DBS collected from healthy male volunteers before oral administration of FLB (C–E).

QC concentration levels were chosen to encompass the clinically relevant range of concentrations found in patients after oral administration of a single 50-mg dose of FLB [40]. The trueness represented the systematic errors of the method and was calculated as the ratio between the nominal and the average measured concentrations. As shown in Table 2, the relative bias was between −5.1% and +6.7% for both analytes. The precision, representing random errors, was expressed by the repeatability (RRSD) and the intermediate precision (IPRSD). Both $R_{R.S.D.}$ and $IP_{R.S.D.}$ values were below 12% for every tested concentration level (see Table 2).

In order to test the selectivity of the method, the blank DBS obtained from the 10 volunteers recruited during the pharmacokinetic study were checked for interference. Results presented in Fig. 4(C–E) showed that no interfering peaks were observed in the retention window of the analytes.

With the on-line DBS automated system procedure, encountered sensitivity was over the concentration range required for this pharmacokinetic application. This advantage allowed the safe quantification of the compounds with an LOQ of 10 and 100 ng/mL for OH-FLB and FLB, respectively. In addition, the encountered sensitivity set the LODs at 1 ng/mL for each compound of interest. LOQ was determined as the lowest QC with trueness and precision under 15%, while LOD was set at 3 times the S/N ratio. Even if only 5 μL of blood were spotted on the filter paper, the good sensitivity obtained might be explained from the use of the on-line DBS process where a solvent is continuously percolated through the filter paper during a fixed time period [35].

Evaluation of matrix effect is an important issue for the validation of bioanalytical methods when atmospheric pressure ionization techniques are used, especially for ESI. Different strategies have been published to determine these matrix effects like the method described by Matuszewski et al. [45] or the method of post-infusion [25,35].

Due to the on-line desorption of DBS, post-fortification of blank DBS samples after extraction to directly determine suppression with the Matuszewski procedure was challenging. An alternative way to evaluate matrix effect in this procedure consisted of spotting corresponding standard methanolic solutions of the compounds directly on the filter paper (DMS). Indeed, rather than comparing the peak area of analyte added after desorption of a DBS compared with that of the analyte in the mobile phase, the absolute analyte peak area obtained after DBS desorption was directly compared with the absolute analyte peak area obtained after DMS desorption to avoid contributions from the extraction procedure. As shown in Table 3, no matrix effect was observed with the developed method using this procedure. Post-column infusion confirmed these data, since any variation in the MS response was observed during the elution window of the compounds (see Fig. S1).

3.1.3. Carry-over and recovery

Compared to trueness and precision which are influenced by the entire method, carry-over and recovery are more dependent on the prototype specifications. During the analytical development of the LC methods, an important aspect to take into consideration was the possible memory effects from previous runs. These effects could lead to hazardous errors in the quantification of interest compounds [46]. Due to the novelty of the on-line DBS automated system, confirmation that no contamination occurred after successive desorptions had to be obtained. As demonstrated in Fig. 3, no carry-over was observed (lower than 0.01%) after the desorption of the highest QC. This result could be explained by the use of the retracted clamp position after the desorption step that allowed the cleaning of both pistons and the LC tubing with a high MeOH flow rate.

In the present procedure, recovery could be considered as the on-line desorption efficiency of the automated system. Due to the micro sampling volumes, the desorption efficiency had to be sufficiently high to reach the lowest concentration ranges. As illustrated in Table 3, acceptable recoveries were obtained for both FLB and OH-FLB at the two tested concentrations. Therefore, this method had the sensitivity required for the pharmacokinetic characterization of both analytes.

3.2. Stability of DBS

To ensure that DBS specimens collected during the pharmacokinetic study could be shipped and stored at ambient temperature, FLB and OH-FLB stability was investigated over 30 days at four different temperatures between −40 and +40 °C. Table 4. shows data that indicate good stability for both analytes, since all the DBS samples stored over 30 days provided concentrations between 85% and 115% of the corresponding 1-day-old DBS samples. Moreover, no

Table 3
Recovery and matrix effect for both analytes in DBS at two concentration levels ($n = 3$) (low level corresponds to 10 and 100 ng/mL for OH-FLB and FLB, respectively; high level corresponds to 1000 and 10,000 ng/mL for OH-FLB and FLB, respectively).

Compounds	Recovery (%)		Matrix effect (%)	
	Low	High	Low	High
FLB	55.1	56.6	+1.4	+2.2
OH-FLB	52.0	50.2	−3.4	−8.5

Table 4
Stability for both analytes in DBS at two concentration levels ($n = 3$) after 30 days of storage (low level corresponds to 10 and 100 ng/mL for OH-FLB and FLB, respectively; high level corresponds to 1000 and 10,000 ng/mL for OH-FLB and FLB, respectively).

Temperatures	FLB		OH-FLB	
	Low (%)	High (%)	Low (%)	High (%)
Ambient	88.0	90.5	90.1	90.8
−20 °C	90.8	92.4	95.2	103.0
+4 °C	102.3	90.5	95.6	90.1
+40 °C	90.9	105.1	109.3	111.0

significant difference was observed between the four tested temperatures. These results were in agreement with those previously published [20] suggesting that DBS samples could be collected, shipped, and stored at ambient temperature or warmer, avoiding unnecessary refrigeration costs.

3.3. Pharmacokinetic study

A pharmacokinetic study of FLB and OH-FLB was successfully performed on 10 healthy male volunteers over 8 h. To demonstrate that the DBS process was suitable for performing clinical analyses as well as conventional plasma collection, a comparison was carried out between DBS and plasma pharmacokinetics. Fig. 5 illustrates typical concentration–time curves of FLB and OH-FLB obtained from both sampling methods. As can be seen, a good correlation between the DBS and plasma time-points was found. This correlation is emphasized by the graphical representation proposed in Fig. 6. As expected, an identical bias was obtained for both FLB and OH-FLB with linear regression slopes close to 0.53.

The means bias, characterized by the above calculated slope, could be attributed to the presence of blood cells in the whole blood (e.g., used for DBS) which induce differences in sample volume compared to plasma. This difference is directly dependent on the patient hematocrit, which has to be taking into considerations when DBS and plasma concentrations are directly compared [9,30]. Indeed, the obtained slope could be interpreted as the inverse of the hematocrit, meaning the hematocrit of the 10 male volunteers was equal to 0.47. This value was within the commonly accepted hematocrit range for the male population [47,48]. Furthermore, the coefficients of determination (r^2) observed for the two regressions were in agreement with the inter-individual variability of the hematocrit discussed above. Additional results of the pharmacokinetic study and the interpretation of the OH-FLB/FLB ratio for the determination of the CYP2C9 activity will be published elsewhere.

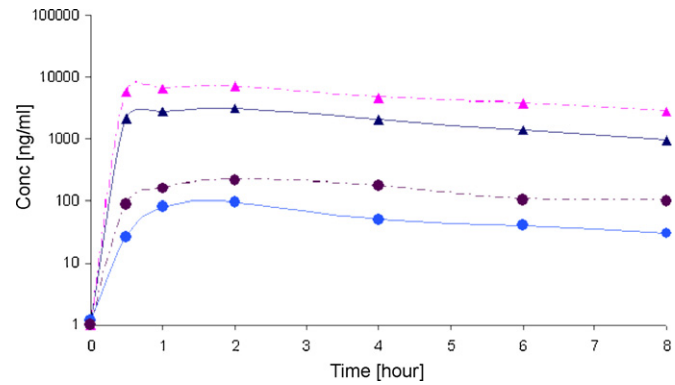

Fig. 5. Representative log concentration–time profile of flurbiprofen (triangles) and 4-hydroxyflurbiprofen (circles) obtained in 5 μL capillary DBS (continuous lines), and venous plasma samples (dashed lines) collected simultaneously from a male volunteer after oral administration of a single 50-mg dose of flurbiprofen. DBS were analyzed by the on-line DBS automated system coupled to LC/MS/MS, whereas plasma samples were performed by LC–fluorescence detection.

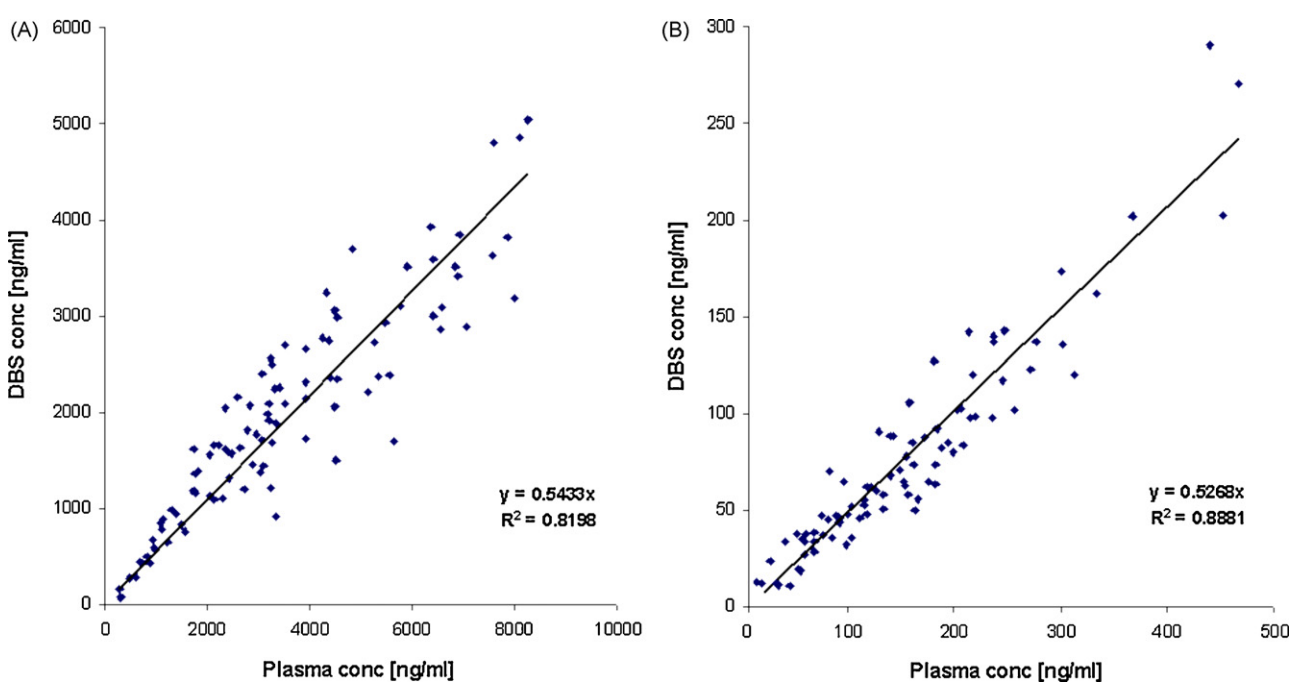

Fig. 6. Comparison between capillary DBS and venous plasma concentrations for flurbiprofen (A) and 4-hydroxyflurbiprofen (B). Concentration values were obtained from the pharmacokinetic study performed on the 10 volunteers. DBS were analyzed by the on-line DBS automated system coupled to LC/MS/MS, whereas plasma samples were performed by LC–fluorescence detection.

4. Conclusion

This paper described the use of a homemade prototype directly coupled to a conventional LC/MS/MS system that allowed the automation of on-line DBS bioanalysis. This automated system was evaluated through the validation of a probe and its metabolite according to international guidelines. From the data, no carry-over was observed with the prototype and acceptable recoveries were achieved. Furthermore, the entire analytical system provided good trueness and precision over the concentration range tested.

The automated system was successfully applied to a pharmacokinetic study of FLB and OH-FLB on human male volunteers. Due to the number of samples collected, a comparison between DBS and conventional venous plasma sampling was also performed. A good correlation for both analytes was obtained confirming that DBS may provide an alternative sampling technique to classic venous plasma for clinical and pharmaceutical applications.

Expansion of dried spot sampling involves developing new analytical strategies to be competitive with high-throughput requirements. As described, the prototype presents novel opportunities in filter paper analysis by affording an efficient tool for rapid and direct analyses of DBS specimens.

Acknowledgments

The authors would like to thank Jocelyne Chabert, Mélanie Verdon, Fabienne Doffey Lazeyras, and Dr. Alain Mattey for their help and assistance during the pharmacokinetic study. Frank Vellut is also thanked for his helpful discussion.

Appendix A. Supplementary data

Supplementary data associated with this article can be found, in the online version, at doi:10.1016/j.jpba.2010.08.032.

References

[1] J.V. Mei, J.R. Alexander, B.W. Adam, W.H. Hannon, Use of filter paper for the collection and analysis of human whole blood specimens, J. Nutr. 131 (2001) 1631S–1636S.
[2] T.W. McDade, S. Williams, J.J. Snodgrass, What a drop can do: dried blood spots as a minimally invasive method for integrating biomarkers into population-based research, Demography 44 (2007) 899–925.
[3] J.V. Cizdziel, Determination of lead in blood by laser ablation ICP-TOF-MS analysis of blood spotted and dried on filter paper: a feasibility study, Anal. Bioanal. Chem. 388 (2007) 603–611.
[4] R.R. Lilian, K. Bhowan, G.G. Sherman, Early diagnosis of human immunodeficiency virus-1 infection in infants with the NucliSens EasyQ assay on dried blood spots, J. Clin. Virol. 48 (2010) 40–43.
[5] C.Y. Cheung, J. van der Heijden, K. Hoogtanders, M. Christiaans, Y.L. Liu, Y.H. Chan, K.S. Choi, A. van de Plas, C.C. Shek, K.F. Chau, C.S. Li, J. van Hooff, L. Stolk, Dried blood spot measurement: application in tacrolimus monitoring using limited sampling strategy and abbreviated AUC estimation, Transpl. Int. 21 (2008) 140–145.
[6] P.M. Edelbroek, J. van der Heijden, L.M.L. Stlok, Dried blood spot methods in therapeutic drug monitoring: methods, assays, and pitfalls, Ther. Drug. Monit. 31 (2009) 327–336.
[7] P. Mwaba, S. Cassol, R. Pilon, C. Chintu, M. Janes, A. Nunn, A. Zumla, Use of dried whole blood spots to measure CD4+ lymphocyte counts in HIV-1-infected patients, Lancet 362 (2003) 1459–1460.
[8] D. Blessborn, S. Römsing, A. Annerberg, D. Sundquist, A. Björkman, N. Lindegardh, Y. Bergqvist, Development and validation of an automated solid-phase extraction and liquid chromatographic method for determination of lumefantrine in capillary blood on sampling paper, J. Pharm. Biomed. Anal. 45 (2007) 282–287.
[9] D.W. Eyles, R. Morley, C. Anderson, P. Ko, T. Burne, M. Permezel, P.B. Mortensen, B. Norgaard-Pedersen, D.M. Hougaard, J.J. McGrath, The utility of neonatal dried blood spots for the assessment of neonatal vitamin D status, Pediatr. Perinat. Epidemiol. 24 (2010) 303–308.
[10] K. Kato, A.A. Wanigatunga, L.L. Needham, A.M. Calafat, Analysis of blood spots for polyfluoroalkyl chemicals, Anal. Chim. Acta 656 (2009) 51–55.
[11] T. Koal, H. Burhenne, R. Römling, M. Svoboda, K. Resch, V. Kaever, Quantification of antiretroviral drugs in dried blood spot samples by means of liquid chromatography/tandem mass spectrometry, Rapid Commun. Mass Spectrom. 19 (2005) 2995–3001.
[12] Guidelines for the Shipment of Dried Blood Spot Specimens, Center for Diseases Control and Prevention, Atlanta, GA, 1995.
[13] T.H.E. Zytkovicz, F. Fitzgerlad, D. Marsden, C.A. Larson, V.E. Shih, D.M. Johnson, A.W. Strauss, A.M. Comeau, R.B. Eaton, G.F. Grady, Tandem mass spectrometric analysis for amino, organic, and fatty acid disorders in newborn dried blood spots: a two-year summary from the New England Newborn Screening Program, Clin. Chem. 47 (2001) 1945–1955.
[14] A.J Wilhelm, J.C.G. den Burger, A. Chahbouni, R.M. Vos, A. Sinjewel, Analysis of mycophenolic acid in dried blood spots using reversed phase high performance liquid chromatography, J. Chromatogr. B 877 (2009) 3916–3919.
[15] S. AbuRuz, J. Millership, J. McElnay, Dried blood spot liquid chromatography assay for therapeutic drug monitoring of metformin, J. Chromatogr. B 832 (2006) 202–207.
[16] K. Hoogtanders, J. van der Heijden, M. Christiaans, P. Edelbroek, J.P. van Hooff, L.M.L. Stolk, Therapeutic drug monitoring of tacrolimus with the dried blood spot method, J. Pharm. Biomed. Anal. 44 (2007) 658–664.
[17] M. Ntale, M. Mahindi, J.W. Ogwal-Okeng, L.L. Gustafsson, O. Beck, A field-adapted HPLC method for determination of amodiaquine and its metabolite in whole blood dried on filter paper, J. Chromatogr. B 859 (2007) 137–140.
[18] A.L. Allanson, M.M. Cotton, J.N.A. Tettey, A.C. Boyter, Determination of rifampicin in human plasma and blood spots by high performance liquid chromatography with UV detection: a potential method for therapeutic drug monitoring, J. Pharm. Biomed. Anal. 44 (2007) 963–969.
[19] G. la Marca, S. Malvagia, L. Filippi, P. Fiorini, M. Innocenti, F. Luceri, G. Pieraccini, G. Moneti, S. Francese, F.R. Dani, R. Guerrini, Rapid assay of topiramate in dried blood spots by a new liquid chromatography–tandem mass spectrometric method, J. Pharm. Biomed. Anal. 48 (2008) 1392–1396.
[20] J. Déglon, E. Lauer, A. Thomas, P. Mangin, C. Staub, Use of the dried blood spot sampling process coupled with fast gas chromatography and negative-ion chemical ionization tandem mass spectrometry: application to fluoxetine, norfluoxetine, reboxetine, and paroxetine analysis, Anal. Bioanal. Chem. 396 (2010) 2523–2532.
[21] M. Barfield, N. Spooner, R. Lad, S. Parry, S. Fowles, Application of dried blood spots combined with HPLC–MS/MS for the quantification of acetaminophen in toxicokinetic studies, J. Chromatogr. B 870 (2008) 32–37.
[22] P. Patel, H. Mulla, S. Tanna, H. Pandya, Facilitating pharmacokinetic studies in children: a new use of dried blood spots, Arch. Dis. Child. 95 (2010) 484–487.
[23] M.F. Suyagh, G. Iheagwaram, P.L. Kole, J. Millership, P. Collier, H. Halliday, J.C. McElnay, Development and validation of a dried blood spot-HPLC assay for the determination of metronidazole in neonatal whole blood samples, Anal. Bioanal. Chem. 397 (2010) 687–693.
[24] R.G. Boy, J. Henseler, R. Mattern, G. Skopp, Determination of morphine and 6-acetylmorphine in blood with use of dried blood spots, Ther. Drug Monit. 30 (2008) 733–739.
[25] A. Thomas, J. Déglon, T. Steimer, P. Mangin, Y. Daali, C. Staub, On-line desorption of dried blood spots coupled to hydrophilic interaction/reversed-phase LC/MS/MS system for the simultaneous analysis of drugs and their polar metabolites, J. Sep. Sci. 33 (2010) 873–879.
[26] P. Beaudette, K.P. Bateman, Discovery stage pharmacokinetics using dried blood spots, J. Chromatogr. B 809 (2004) 153–158.
[27] C.W.N. Damen, H. Rosing, J.H.M. Schellens, J.H. Beijnen, Application of dried blood spots combined with high-performance liquid chromatography coupled with electrospray ionisation tandem mass spectrometry for simultaneous quantification of vincristine and actinomycin-D, Anal. Bioanal. Chem. 394 (2009) 1171–1182.
[28] T. Mauriala, N. Chauret, R. Oballa, D.A. Nicoll-Griffith, K.P. Bateman, A strategy for identification of drug metabolites from dried blood spots using triple-quadrupole/linear ion trap hybrid mass spectrometry, Rapid Commun. Mass Spectrom. 19 (2005) 1984–1992.
[29] F. Saint-Marcoux, F.L. Sauvage, P. Marquet, Current role of LC–MS in therapeutic drug monitoring, Anal. Bioanal. Chem. 388 (2007) 1327–1349.
[30] W. Li, F.L.S. Tse, Dried blood spot sampling in combination with LC–MS/MS for quantitative analysis of small molecules, Biomed. Chromatogr. 24 (2010) 49–65.
[31] G.J. Van Berkel, V. Kertesz, Application of a liquid extraction based sealing surface sampling probe for mass spectrometric analysis of dried blood spots and mouse whole-body thin tissue sections, Anal. Chem. 81 (2009) 9146–9152.
[32] P. Abu-Rabie, N. Spooner, Direct quantitative bioanalysis of drugs in dried blood spot samples using a thin-layer chromatography–mass spectrometer interface, Anal. Chem. 81 (2009) 10275–10284.
[33] J. Liu, H. Wang, N.E. Manicke, J.-M. Lin, R.G. Cooks, Z. Ouyang, Development, characterization, and application of paper spray ionization, Anal. Chem. 82 (2010) 2463–2471.
[34] J.M. Wiseman, C.A. Evans, C.L. Bowen, J.H. Kennedy, Direct analysis of dried blood spots utilizing desorption electrospray ionization (DESI) mass spectrometry, Analyst 135 (2010) 720–725.
[35] J. Déglon, A. Thomas, A. Cataldo, P. Mangin, C. Staub, On-line desorption of dried blood spot: a novel approach for the direct LC/MS analysis of micro-whole blood samples, J. Pharm. Biomed. Anal. 49 (2009) 1034–1039.
[36] A. Petsalo, M. Turpeinen, O. Pelkonen, A. Tolonen, Analysis of nine drugs and their cytochrome P450-specific probe metabolites from urine by liquid chromatography–tandem mass spectrometry utilizing sub2 microm particle size column, J. Chromatogr. A 1215 (2008) 107–115.

[37] A. Kumar, H.J. Mann, R.P. Remmel, Simultaneous analysis of cytochrome P450 probes-dextromethorphan, flurbiprofen and midazolam and their major metabolites by HPLC–mass-spectrometry/fluorescence after single-step extraction from plasma, J. Chromatogr. B 853 (2007) 287–293.
[38] C.B. Eap, G. Bouchoux, K. Powell Golay, P. Baumann, Determination of picogram levels of midazolam, and 1- and 4-hydroxymidazolam in human plasma by gas chromatography–negative chemical ionization–mass spectrometry, J. Chromatogr. B 802 (2004) 339–345.
[39] N.K. Zgheib, R.F. Frye, T.S. Tracy, M. Romkes, R.A. Branch, Validation of incorporating flurbiprofen into the Pittsburgh cocktail, Clin. Pharmacol. Ther. 80 (2006) 257–263.
[40] J.M. Hutzler, R.F. Frye, T.S. Tracy, Sensitive and specific high-performance liquid chromatographic assay for 4′-hydroxyflurbiprofen and flurbiprofen in human urine and plasma, J. Chromatogr. B 749 (2000) 119–125.
[41] P. Hubert, J.J. Nguyen-Huu, B. Boulanger, E. Chapuzet, P. Chiap, N. Cohen, P.A. Compagnon, W. Dewé, M. Feinberg, M. Lallier, M. Laurentie, N. Mercier, G. Muzard, C. Nivet, L. Valat, E. Rozet, Harmonization of strategies for the validation of quantitative analytical procedures. A SFSTP proposal—part II, J. Pharm. Biomed. Anal. 45 (2007) 70–81.
[42] M. Clement Jerdi, Y. Daali, M. Kondo Oestreicher, S. Cherkaoui, P. Dayer, A simplified analytical method for a phenotyping cocktail of major CYP450 biotransformation routes, J. Pharm. Biomed. Anal. 35 (2004) 1203–1212.
[43] A. Thomas, C. Widmer, G. Hopfgartner, C. Staub, Fast gas chromatography and negative-ion chemical ionization tandem mass spectrometry for forensic analysis of cannabinoids in whole blood, J. Pharm. Biomed. Anal. 45 (2007) 495–503.
[44] P. Hubert, P. Chiap, J. Crommen, B. Boulanger, E. Chapuzet, N. Mercier, S. Bervoas-Martin, P. Chevalier, D. Grandjean, P. Lagorce, M. Lallier, M.C. Laparra, M. Laurentie, J.C. Nivet, The SFSTP guide on the validation of chromatographic methods for drug bioanalysis: from the Washington Conference to the laboratory, Anal. Chim. Acta 391 (1999) 135–148.
[45] B.K. Matuszewski, M.L. Constanzer, C.M. Chavez-Eng, Strategies for the assessment of matrix effect in quantitative bioanalytical methods based on HPLC–MS/MS, Anal. Chem. 75 (2003) 3019–3030.
[46] A. Thomas, G. Hopfgartner, C. Giroud, C. Staub, Quantitative and qualitative profiling of endocannabinoids in human plasma using a triple quadrupole linear ion trap mass spectrometer with liquid chromatography, Rapid Commun. Mass Spectrom. 23 (2009) 629–638.
[47] M. Rowland, G.T. Emmons, Use of dried blood spots in drug development: pharmacokinetic considerations, AAPS J. 12 (2010) 290–293.
[48] W.K. Purves, D. Sadava, G.H. Orians, H.H. Craig, Life: The Science of Biology, 7th ed., Sinauer Associates, Mass, Sunderland, 2004.